VORTICENT CMS ATEX 16/6 T2 0,37kW Zone 2: FAN (Ex h IIB T3 Gc) + MOTOR (Ex ec IIC T3 Gc) (30175)

GENERAL DATA

CENTRIFUGAL MEDIUM PRESSURE ATEX FAN

MANUFACTURING FEATURES

• Rolling steel sheet housing.
• Completely joined or welded housing.
• Galvanised steel sheet simple inlet forward curved impeller.
• Polyester powder finishing coat.
• Inlet sparkproof ring made of copper or aluminium.
• ATEX standard asynchronous motor. ATEX certified according to the zone. IP55 protection, and class F insulation. Manufactured with standard voltages: 230V 50Hz for single phase motors, 230/400V 50Hz for three phase motors up to 4kW and 400/690V 50Hz for higher powers.

• Available positions (to be indicated in case of order): LG270, LG0, LG45, LG90, LG135, LG180, LG225, LG315, RD0, RD45, RD90, RD135, RD180, RD225, RD270, RD315.
• The indicated codes correspond to the model in position LG270

APPLICATIONS
Designed for inline installation, they are suitable for:
• Ventilation in indoor environments classified as ATEX
• Working temperature: ambient from -20ºC to 40ºC, transported air according to the ATEX clasification.
• Suitable for transporting totally clean air without dust.

UNDER REQUEST
• 60Hz fans and special voltages.

ORGANISM: L.O.M.
CERTIFICAT Nº: LOM 17.407N-C

In compliance with the Directive 2014/34/UE

PERFORMANCE CURVE

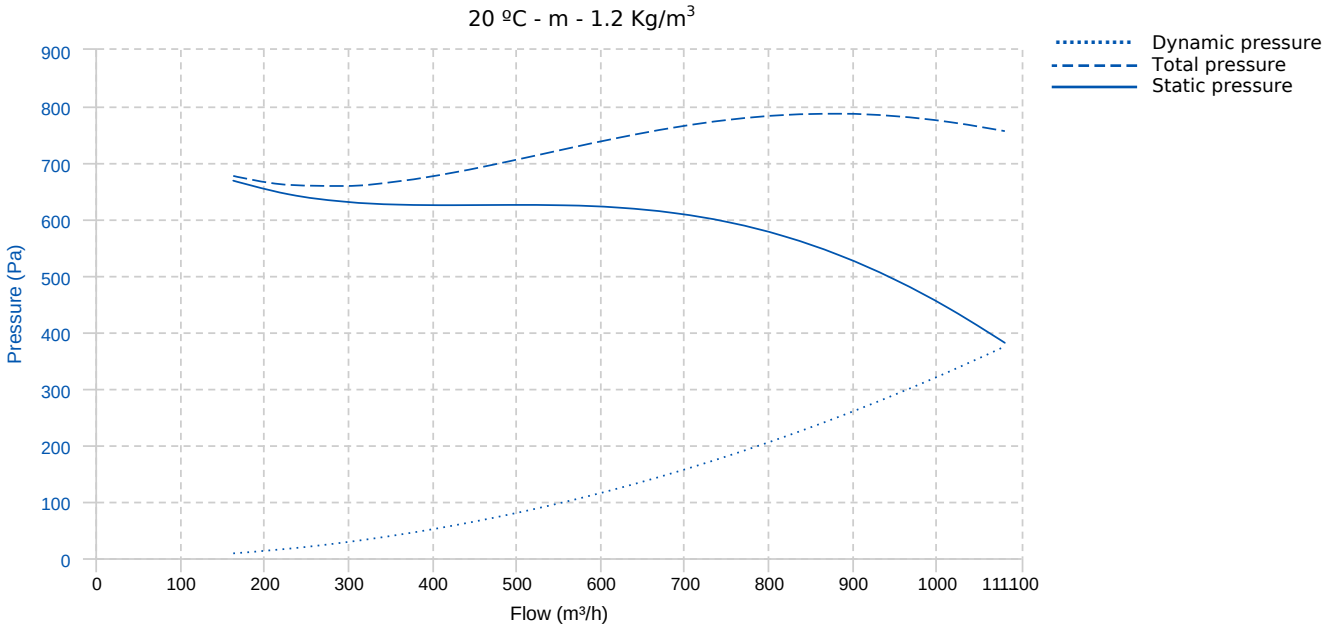

TECHNICAL DATA

Fan							
RPM	2850	Approx. weight	9.5 kg	Max. Flow	1080 m³/h		
Motor							
Power	0,37 kW	RPM	2850	I max. (400V)	1 A	Size	71
Approx. weight	6 kg	Efficiency (%)	71 %	FP	0.7		

DIMENSIONS

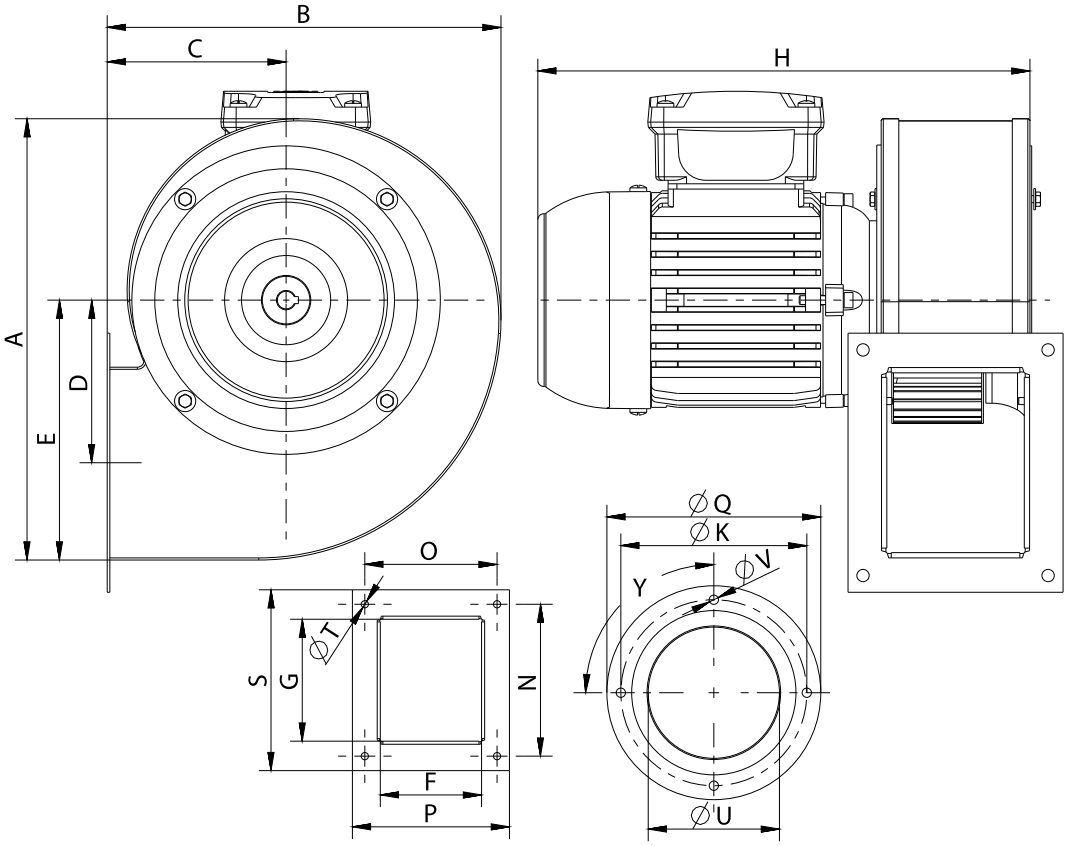

BOCA DE IMPULSION
(OUTLET)

BOCA DE ASPIRACION
(INLET)

Dimensions (mm)									
A	295	B	266	C	119	D	108,5	E	171,5
F	98	G	118	H	325	K	180	N	147
O	128	P	152	Q	207	S	175	TØ	7
UØ	127	VØ	9	Y	4x90º				

WIRING DIAGRAM

230V △

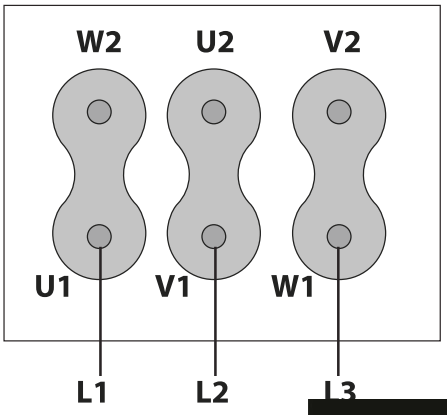

400V ⅄

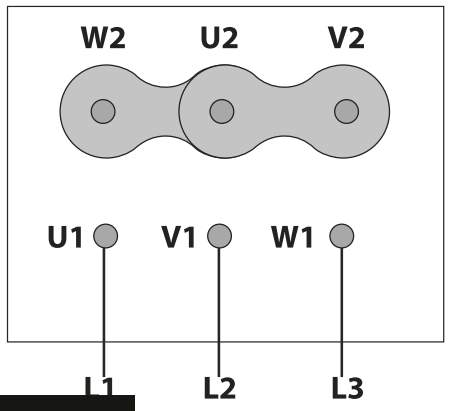

ACCESSORIES

INLET PROTECTION GUARD FOR CENTRIFUGAL FANS
MSRA 16/6
REF: 20263

ANTI-VIBRATING FLANGE 400º/2H
FLC1-F400 15/16
REF: 21985

ANTI-VIBRATION JOINT
FJ-F450
REF: 21669

CONECTION FLANGE
MFLAC 16/6
REF: 20230

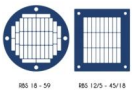

OUTLET PROTECTION GUARD
MSRBS 16/6
REF: 20249

ATEX SWITCH
INT 16 ATEX
REF: 20355

FREQUENCY SPEED CONTROLLER
IREM INVERTER 230 2.5A
REF: 12872

FREQUENCY SPEED CONTROLLER
IRET INVERTER 400 1.2A
REF: 12876