VORTICENT CMS ATEX 28/11 T4 1,1kW Zone 2: FAN (Ex h IIB T3 Gc) + MOTOR (Ex ec IIC T3 Gc)

GENERAL DATA

CENTRIFUGAL MEDIUM PRESSURE ATEX FAN

MANUFACTURING FEATURES

• Rolling steel sheet housing.
• Completely joined or welded housing.
• Galvanised steel sheet simple inlet forward curved impeller.
• Polyester powder finishing coat.
• Inlet sparkproof ring made of copper or aluminium.
• ATEX standard asynchronous motor. ATEX certified according to the zone. IP55 protection, and class F insulation. Manufactured with standard voltages: 230V 50Hz for single phase motors, 230/400V 50Hz for three phase motors up to 4kW and 400/690V 50Hz for higher powers.

• Available positions (to be indicated in case of order): LG270, LG0, LG45, LG90, LG135, LG180, LG225, LG315, RD0, RD45, RD90, RD135, RD180, RD225, RD270, RD315.
• The indicated codes correspond to the model in position LG270

APPLICATIONS
Designed for inline installation, they are suitable for:
• Ventilation in indoor environments classified as ATEX
• Working temperature: ambient from -20ºC to 40ºC, transported air according to the ATEX clasification.
• Suitable for transporting totally clean air without dust.

UNDER REQUEST
• 60Hz fans and special voltages.

ORGANISM: L.O.M.
CERTIFICAT Nº: LOM 17.407N-C

In compliance with the Directive 2014/34/UE

PERFORMANCE CURVE

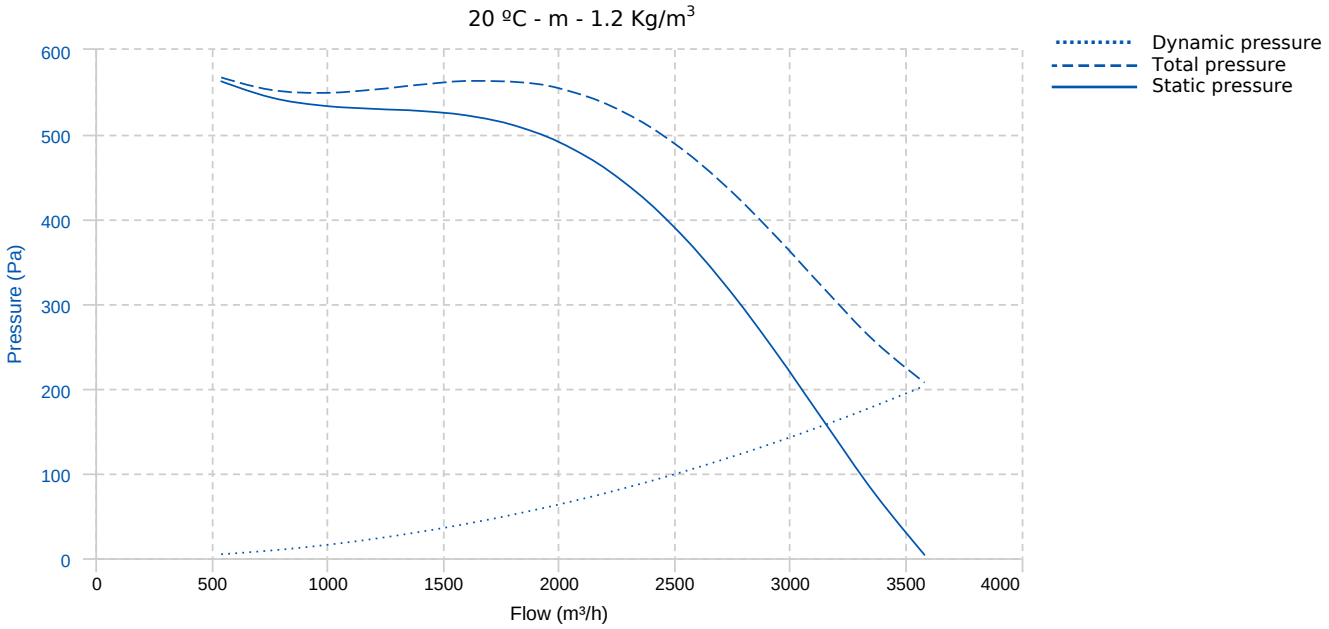

TECHNICAL DATA

Fan							
RPM	1420	Approx. weight	32 kg	Max. Flow	3580 m³/h		
Motor							
Power	1,1 kW	RPM	1420	I max. (400V)	3,3 A	Size	90L
Approx. weight	12 kg	Efficiency (%)	71 %	FP	0.7		

DIMENSIONS

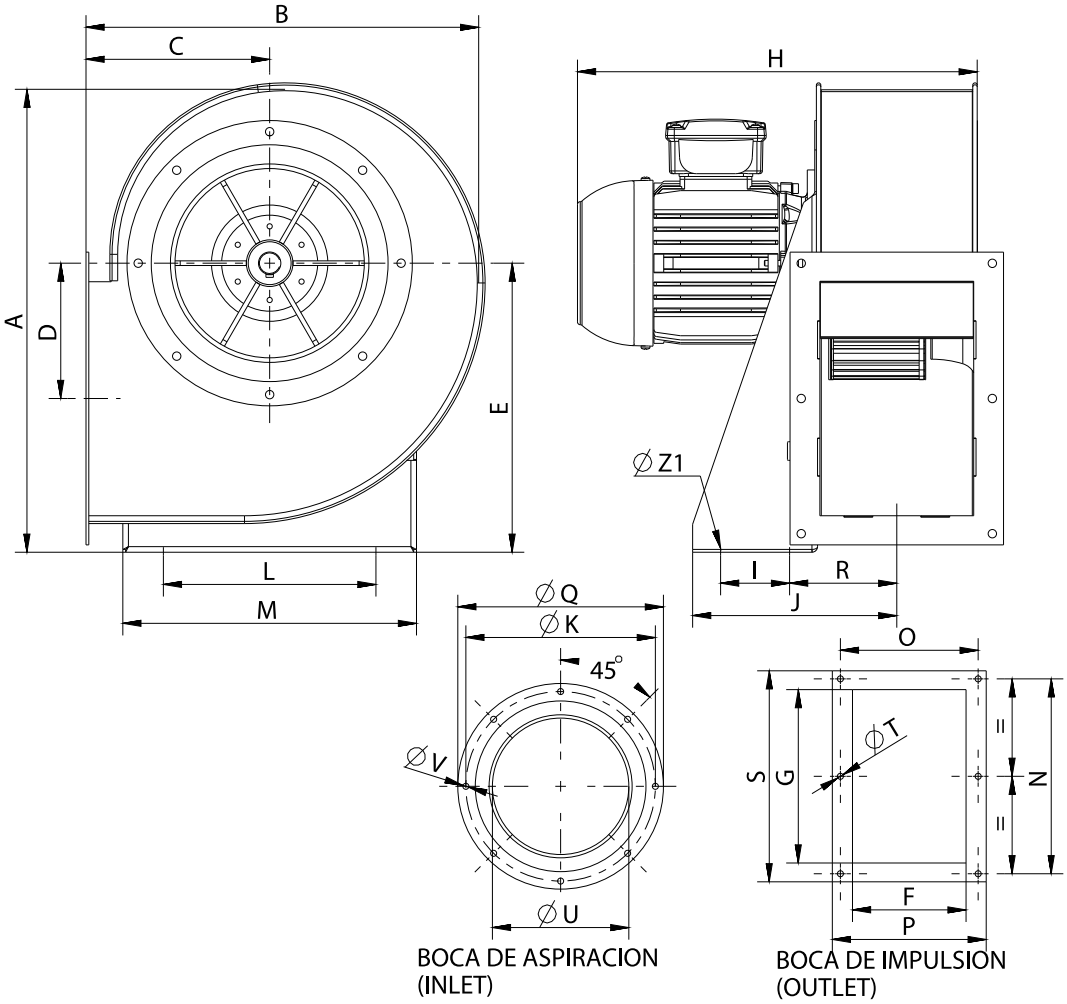

Dimensions (mm)									
A	555	B	475	C	216	D	160	E	340
F	176	G	300	H	453,5	I	95	J	234.5
K	320	L	245	M	350	N	340	O	220
P	244	Q	348	R	110	S	364	TØ	11
UØ	228	VØ	9	Z1Ø	11				

WIRING DIAGRAM

230V △

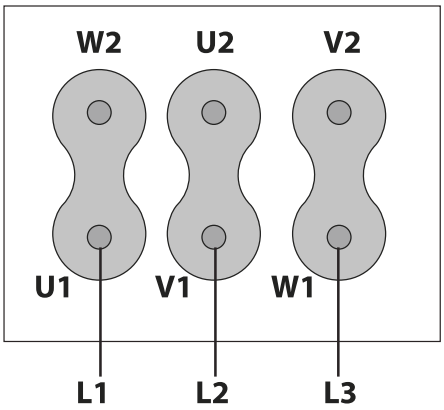

400V ⅄

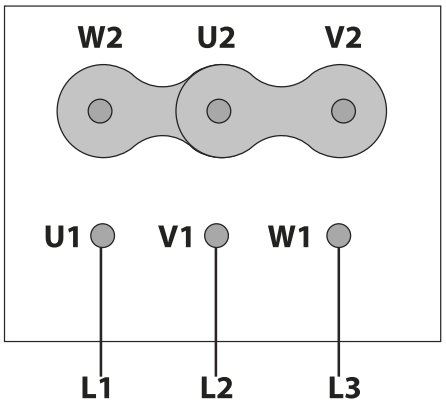

ACCESSORIES

INLET PROTECTION GUARD FOR CENTRIFUGAL FANS
MSRA 28/11
REF: 20242

ANTI-VIBRATING FLANGE 400º/2H
FLC1-F400 30/31
REF: 21988

ANTI-VIBRATION JOINT
FJ-F450
REF: 21669

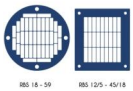

OUTLET PROTECTION GUARD
MSRBS 28/11
REF: 20255

CONECTION FLANGE
MFLAC 28/11-31/12
REF: 20235

ATEX SWITCH
INT 16 ATEX
REF: 20355

FREQUENCY SPEED CONTROLLER
IREM INVERTER 230 7A
REF: 12874

FREQUENCY SPEED CONTROLLER
IRET INVERTER 400 3.6A
REF: 12878

ANTI-VIBRATION RUBBER BLOCK
NRD-F400 (GENERIC)

ANTI-VIBRATION SPRING BLOCK
XS-F400 (GENERIC)