VORTICENT CMS ATEX 31/12 T4 2,2kW Zone 2: FAN (Ex h IIB T3 Gc) + MOTOR (Ex ec IIC T3 Gc)

GENERAL DATA

CENTRIFUGAL MEDIUM PRESSURE ATEX FAN

MANUFACTURING FEATURES

• Rolling steel sheet housing.
• Completely joined or welded housing.
• Galvanised steel sheet simple inlet forward curved impeller.
• Polyester powder finishing coat.
• Inlet sparkproof ring made of copper or aluminium.
• ATEX standard asynchronous motor. ATEX certified according to the zone. IP55 protection, and class F insulation. Manufactured with standard voltages: 230V 50Hz for single phase motors, 230/400V 50Hz for three phase motors up to 4kW and 400/690V 50Hz for higher powers.

• Available positions (to be indicated in case of order): LG270, LG0, LG45, LG90, LG135, LG180, LG225, LG315, RD0, RD45, RD90, RD135, RD180, RD225, RD270, RD315.
• The indicated codes correspond to the model in position LG270

APPLICATIONS
Designed for inline installation, they are suitable for:
• Ventilation in indoor environments classified as ATEX
• Working temperature: ambient from -20ºC to 40ºC, transported air according to the ATEX clasification.
• Suitable for transporting totally clean air without dust.

UNDER REQUEST
• 60Hz fans and special voltages.

ORGANISM: L.O.M.
CERTIFICAT Nº: LOM 17.407N-C

In compliance with the Directive 2014/34/UE

PERFORMANCE CURVE

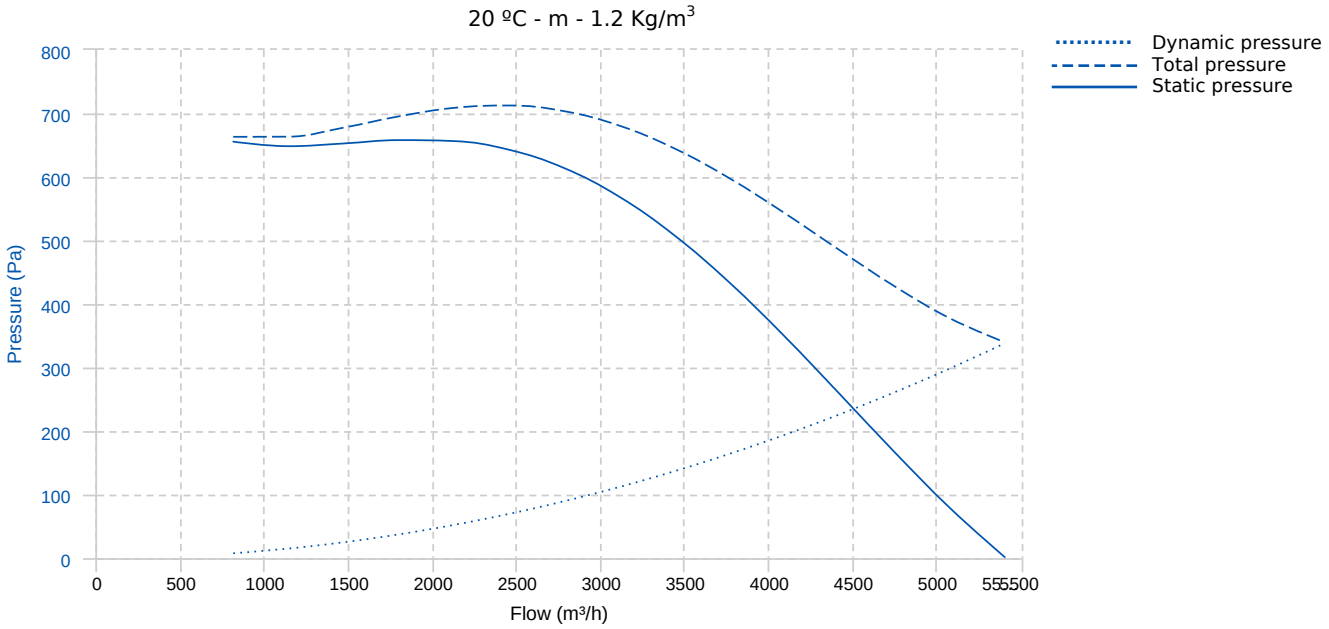

TECHNICAL DATA

Fan							
RPM	1440	Approx. weight	54 kg	Max. Flow	5400 m³/h		
Motor							
Power	2,2 kW	RPM	1440	I max. (400V)	5,8 A	Size	100L
Approx. weight	20 kg	Efficiency (%)	80 %	FP	0.77		

DIMENSIONS

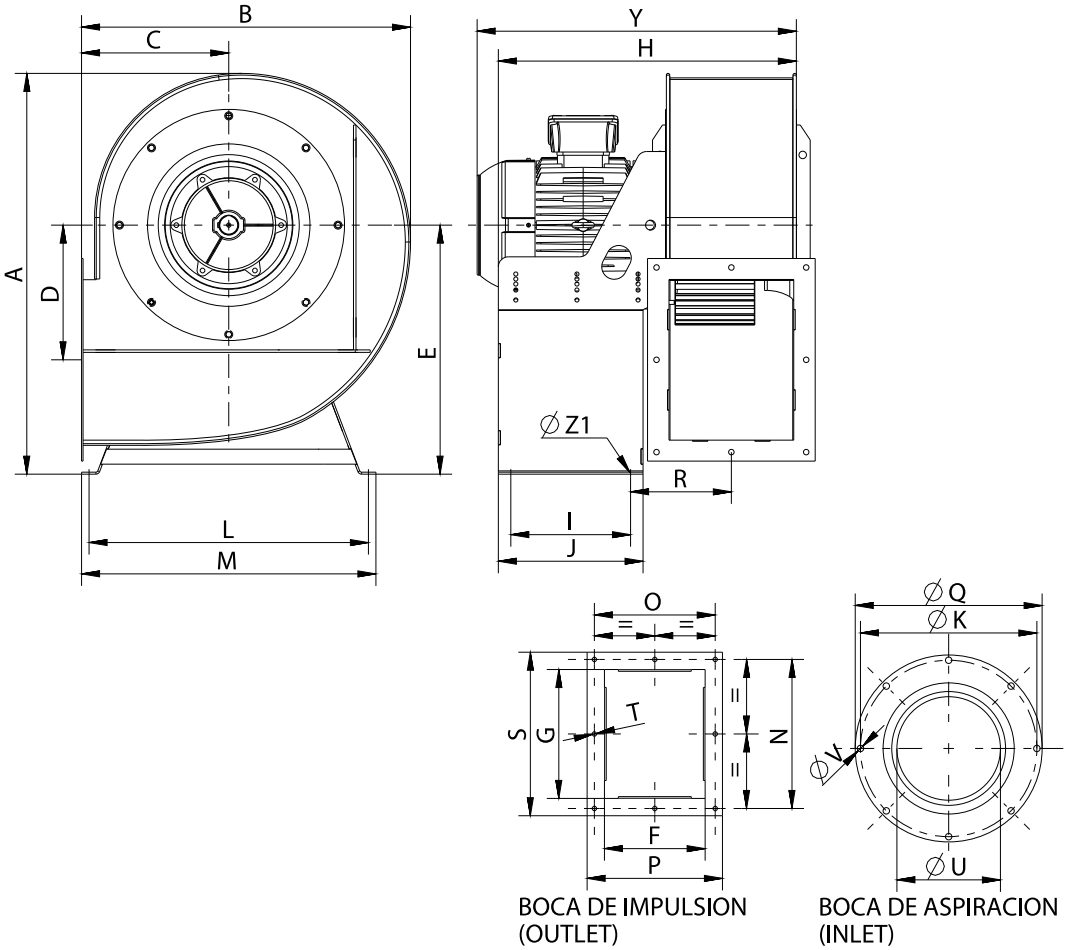

Dimensions (mm)									
A	646	B	537	C	249	D	186	E	406
F	198	G	319	H	538	I	240	J	290
K	354,5	L	457	M	482	N	360	O	240
P	274	Q	382	R	171	S	395	TØ	11
UØ	257	VØ	11	Y	539,5	Z1	13		

WIRING DIAGRAM

230V △

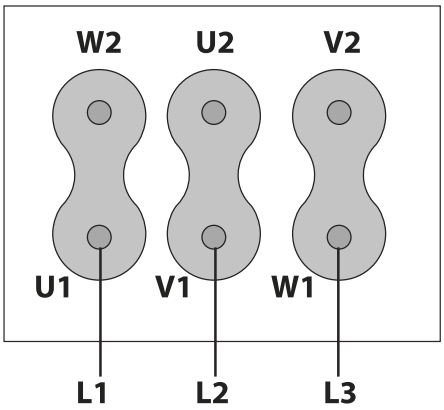

400V ⅄

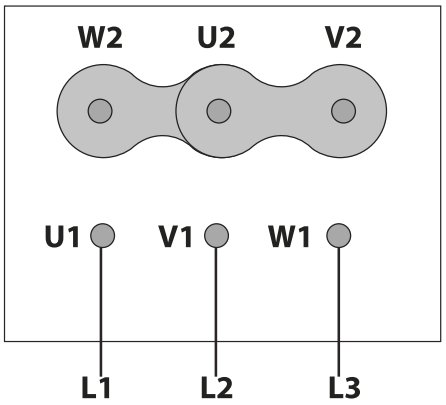

ACCESSORIES

INLET PROTECTION GUARD FOR CENTRIFUGAL FANS
MSRA 31/12
REF: 20243

ANTI-VIBRATION JOINT
FJ-F450
REF: 21669

CONECTION FLANGE
MFLAC 28/11-31/12
REF: 20235

FREQUENCY SPEED CONTROLLER
IRET INVERTER 400 8A
REF: 12880

ANTI-VIBRATION SPRING BLOCK
XS-F400 (GENERIC)

ANTI-VIBRATING FLANGE 400º/2H
FLC1-F400 30/31
REF: 21988

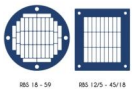

OUTLET PROTECTION GUARD
MSRBS 31/12
REF: 20256

ATEX SWITCH
INT 16 ATEX
REF: 20355

ANTI-VIBRATION RUBBER BLOCK
NRD-F400 (GENERIC)