VORTICENT CMS ATEX 45/18 T4 11kW Zone 2: FAN (Ex h IIB T3 Gc) + MOTOR (Ex ec IIC T3 Gc)

GENERAL DATA

CENTRIFUGAL MEDIUM PRESSURE ATEX FAN

MANUFACTURING FEATURES

• Rolling steel sheet housing.
• Completely joined or welded housing.
• Galvanised steel sheet simple inlet forward curved impeller.
• Polyester powder finishing coat.
• Inlet sparkproof ring made of copper or aluminium.
• ATEX standard asynchronous motor. ATEX certified according to the zone. IP55 protection, and class F insulation. Manufactured with standard voltages: 230V 50Hz for single phase motors, 230/400V 50Hz for three phase motors up to 4kW and 400/690V 50Hz for higher powers.

• Available positions (to be indicated in case of order): LG270, LG0, LG45, LG90, LG135, LG180, LG225, LG315, RD0, RD45, RD90, RD135, RD180, RD225, RD270, RD315.
• The indicated codes correspond to the model in position LG270

APPLICATIONS
Designed for inline installation, they are suitable for:
• Ventilation in indoor environments classified as ATEX
• Working temperature: ambient from -20ºC to 40ºC, transported air according to the ATEX clasification.
• Suitable for transporting totally clean air without dust.

UNDER REQUEST
• 60Hz fans and special voltages.

ORGANISM: L.O.M.
CERTIFICAT Nº: LOM 17.407N-C

In compliance with the Directive 2014/34/UE

PERFORMANCE CURVE

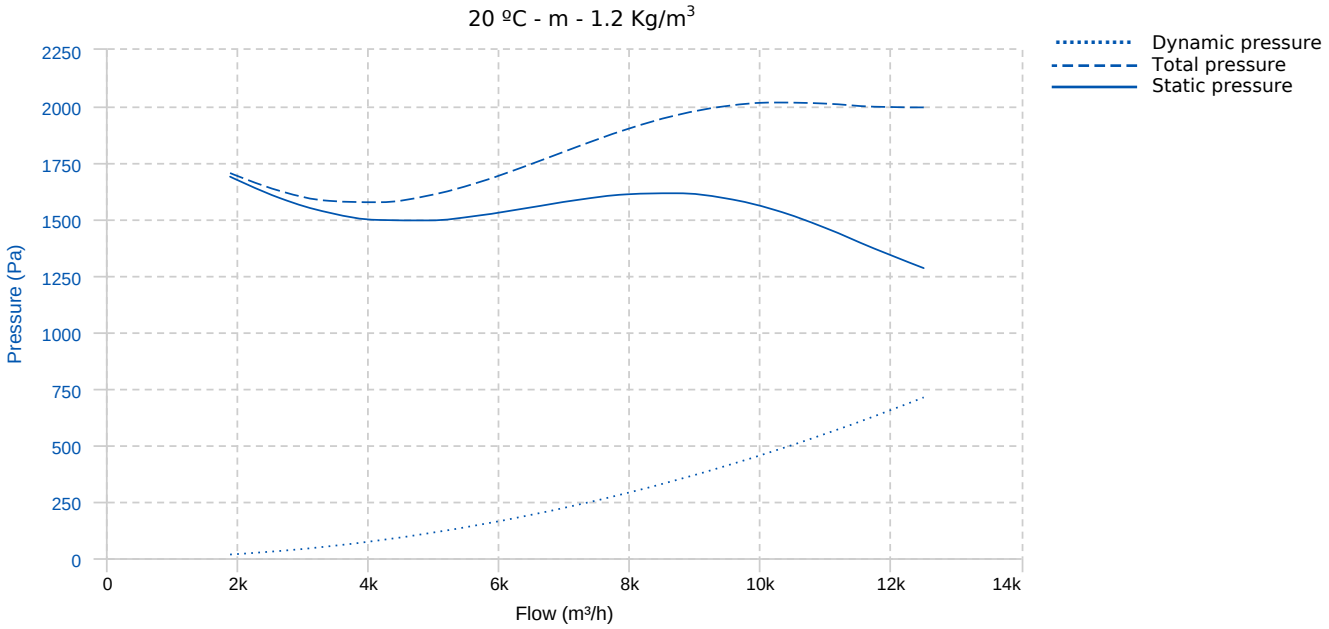

TECHNICAL DATA

Fan							
RPM	1460	Approx. weight	190 kg	Max. Flow	12500 m³/h		
Motor							
Power	11 kW	RPM	1460	I max. (400V)	20,9 A	Size	160L
Approx. weight	100 kg	Efficiency (%)	88 %	FP	0.75		

DIMENSIONS

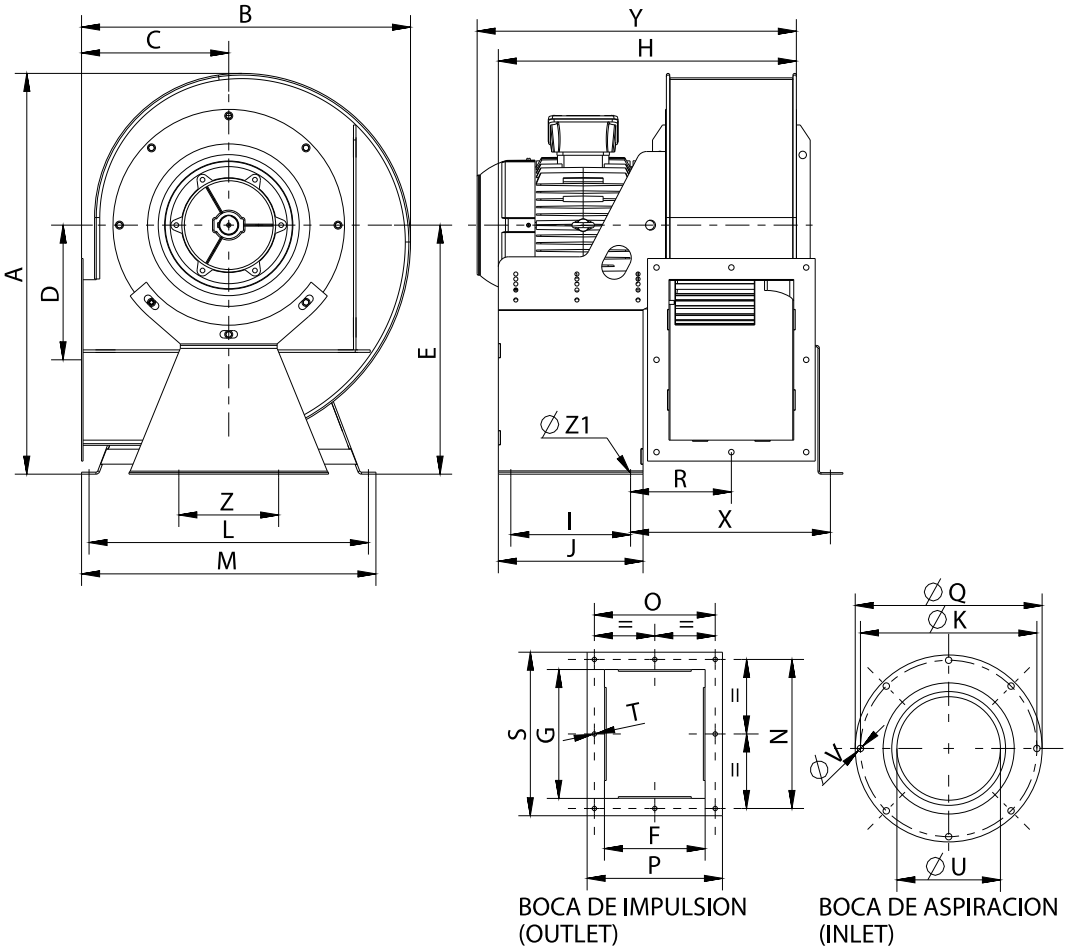

Dimensions (mm)									
A	891	B	737	C	329	D	314,5	E	553
F	280	G	360	H	791	I	400	J	450
K	485	L	602	M	632	N	404	O	328
P	356	Q	515	R	207	S	436	TØ	11
UØ	365	VØ	11	X	430	Y	802,75	Z	200
Z1	13								

WIRING DIAGRAM

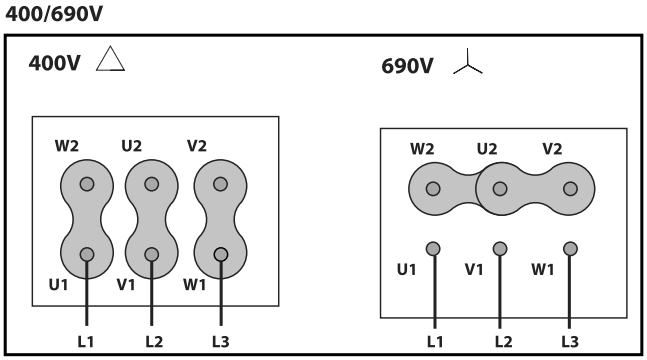

ACCESSORIES

INLET PROTECTION GUARD FOR CENTRIFUGAL FANS
MSRA 45/18
REF: 20246

CONECTION FLANGE
MFLAC 45/18
REF: 20238

ANTI-VIBRATING FLANGE 400º/2H
FLC1-F400 45
REF: 21991

ANTI-VIBRATION JOINT
FJ-F450
REF: 21669

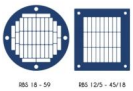

OUTLET PROTECTION GUARD
MSRBS 45/18
REF: 20259

ATEX SWITCH
INT 25 ATEX
REF: 20949

FREQUENCY SPEED CONTROLLER
IRET INVERTER 400 23A
REF: 12883

ANTI-VIBRATION RUBBER BLOCK
NRD-F400 (GENERIC)

ANTI-VIBRATION SPRING BLOCK
XS-F400 (GENERIC)